DV90DMP EXPLODED VIEW & LISTING

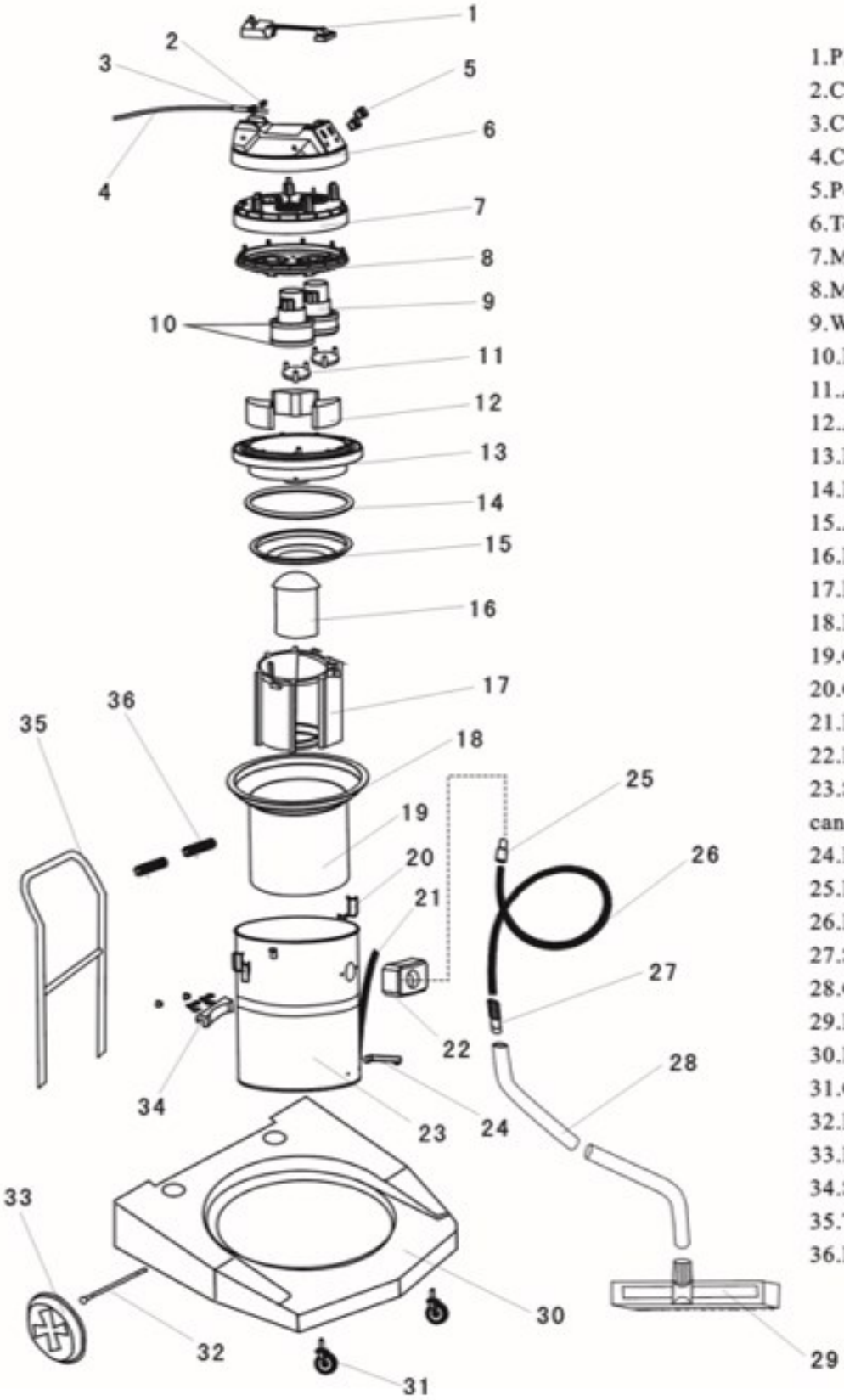

1.Plastic handle
2.Cable clamp-black
3.Cable grommet sleeve
4.Core cable
5.Pole on/off switch
6.Top cover
7.Motor enclosure
8.Motor retaining mould
9.Wet/dry motor
10.Motor mounting
11.Air inlet baffle
12.Air baffle
13.Motor mounting base
14.Rubber seal
15.Air inlet valve
16.Float ball
17.Float cage assembly
18.Moulded bag ring
19.Cloth filter assembly
20.Canister clip
21.Drainage hose
22.Hose inlet assembly
23.Stainless steel canister/plastic canister
24.Handle
25.Hose cuff
26.Flexible hose
27.Swivel cuff
28.Chromed metal tube
29.Floor pick up tool
30.Plastic base
31.Castor wheel
32.Rear wheel
33.Rear wheel
34.Swivel bracket
35.Trolley frame handle
36.Handle grip